File: h:/coursesS18/307/Relax_osc_exp0.doc RWN 01/23/18

First Week ENEE 307 Experiments
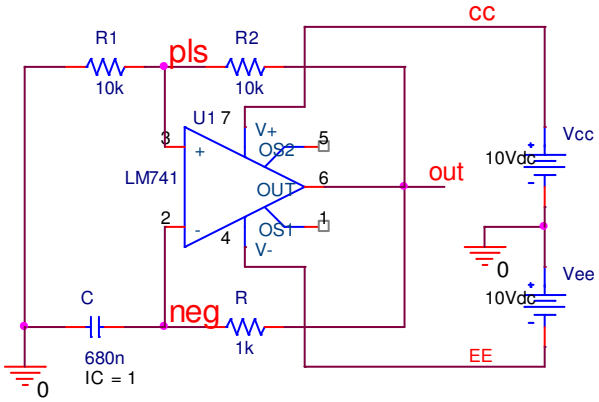
1. Get used to the laboratory equipment and key parts. Thus, check the manuals for the measuring equipment (many on the web) and data sheets for the transistors and op-amps.
2. Run Spice to check the op-amp gain and 3db point.
3. Use a breadboard and physically measure the op-amp, 1458 (which is equivalent to a 741) dc gain and 3db point and from that consider what its large signal circuit model should be.
4. Check the design of the following relaxation oscillator using a 1458 for the op-amp. Do this by running Spice and doing an X-Y plot (with X=capacitor voltage and Y=output voltage).
5. Construct and test the oscillator in the laboratory and compare with the Spice runs.